Mytrix

Wireless Controller for NS

MTNSPC-S01

USER MANUAL

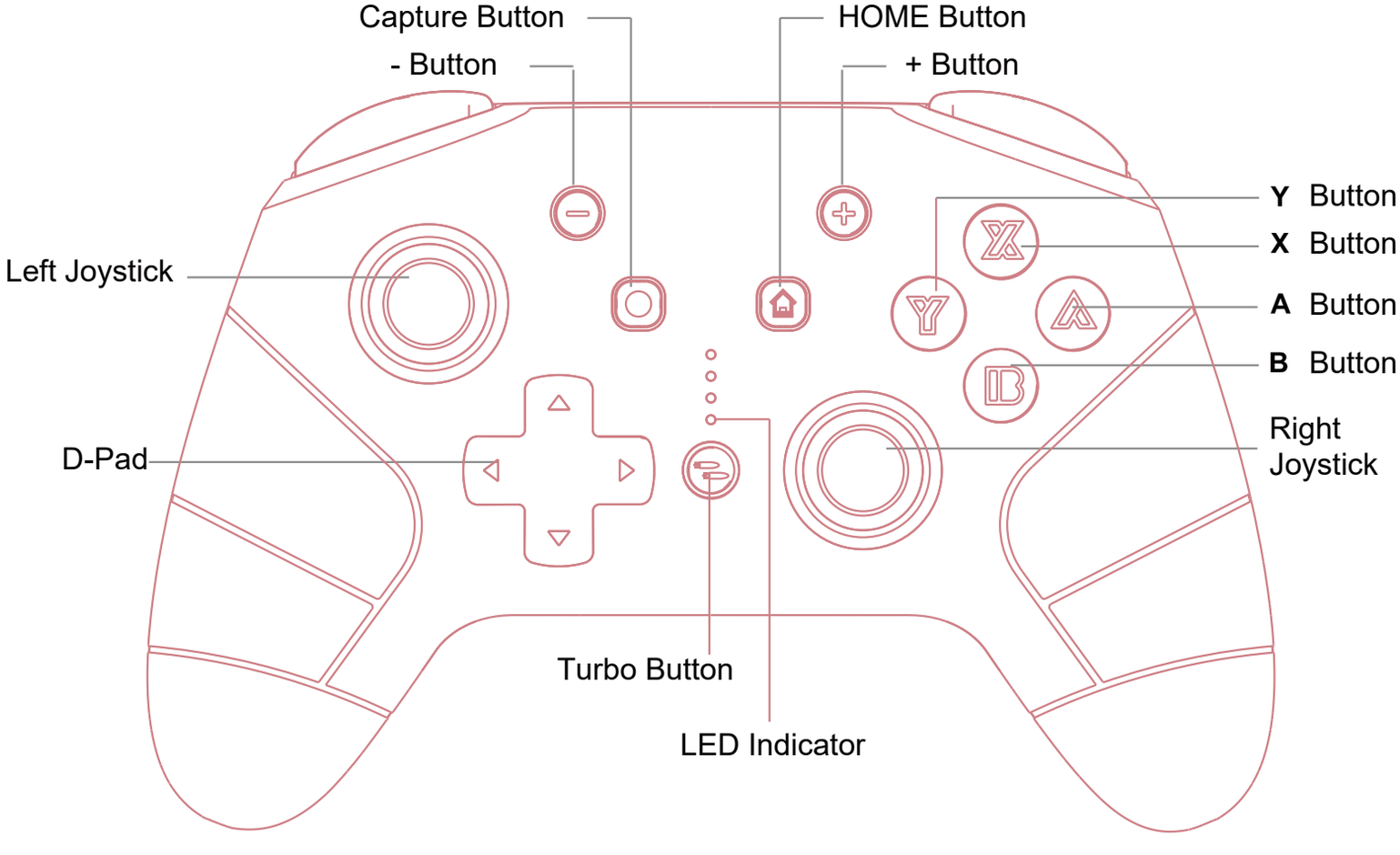
Capture Button
- Button
HOME Button
+ Button
Y Button
X Button
A Button
B Button
Left Joystick
D-Pad
Right Joystick
Turbo Button
LED Indicator

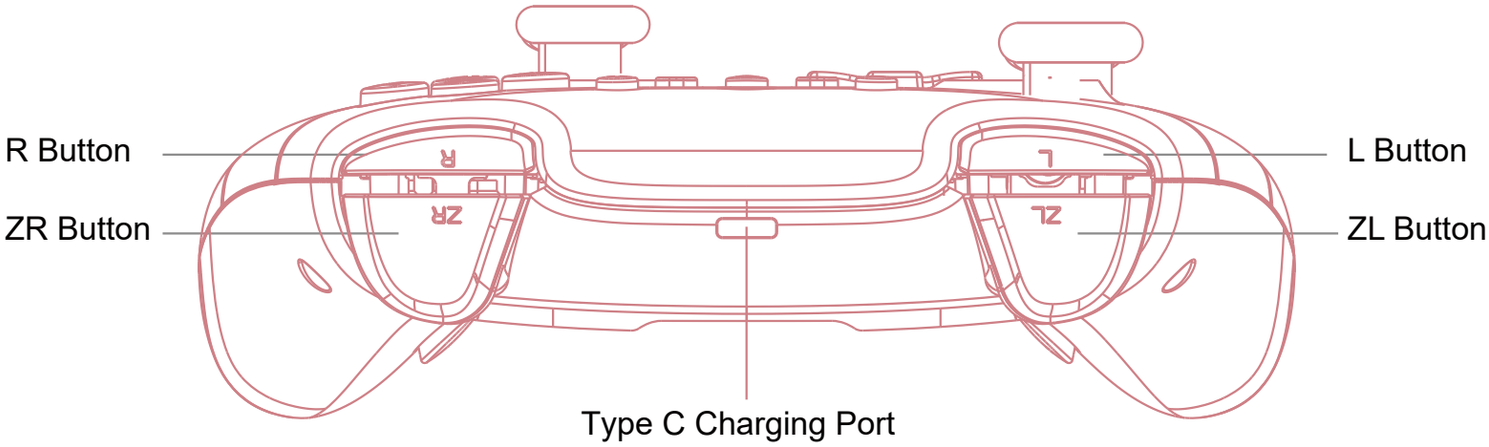

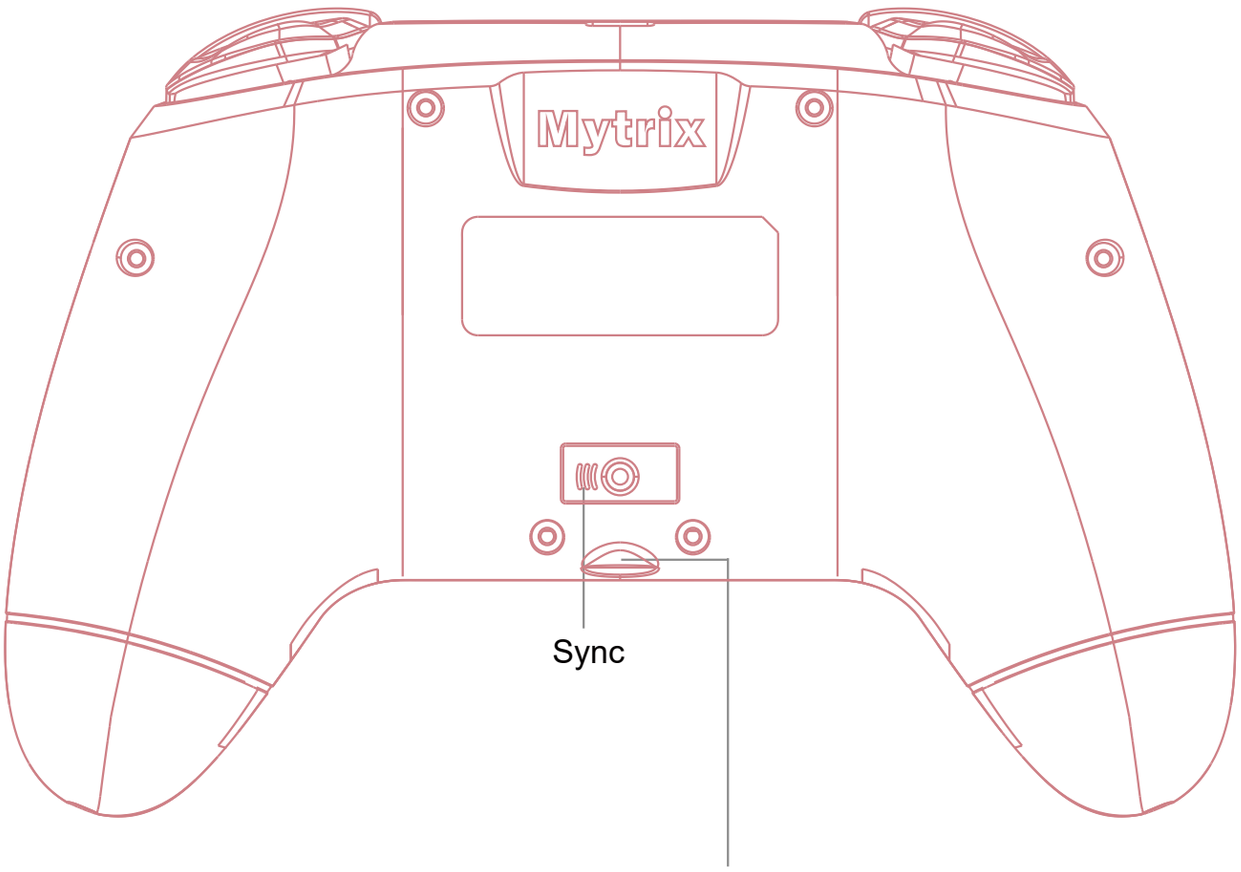

3.5mm jack(only works when controller connects console via cable)

Specification

Input Voltage: 5V, 350mA
Working Voltage: 3.7V
Battery Capacity: 600mAh
Product Size: 154*59*111mm
Weight: 248 ± 10g
Material: ABS

Package Includes

1x Controller
1x USB Type-c Charging Cable
1x User Manual

Wireless Connection

Please Note: Please make sure the AIRPLANE mode of the console is turned off before starting using.

First-Time Pairing:

1. From the HOME menu of the console, select **Controllers Change Grip/Order.**

2. Press and hold the "SYNC" button on the bottom of the, then controller for at least five seconds to power on the controller until all 4 LEDs flash. Once paired, all 4 LEDs will remain lit, and the controller will be shown on the screen.

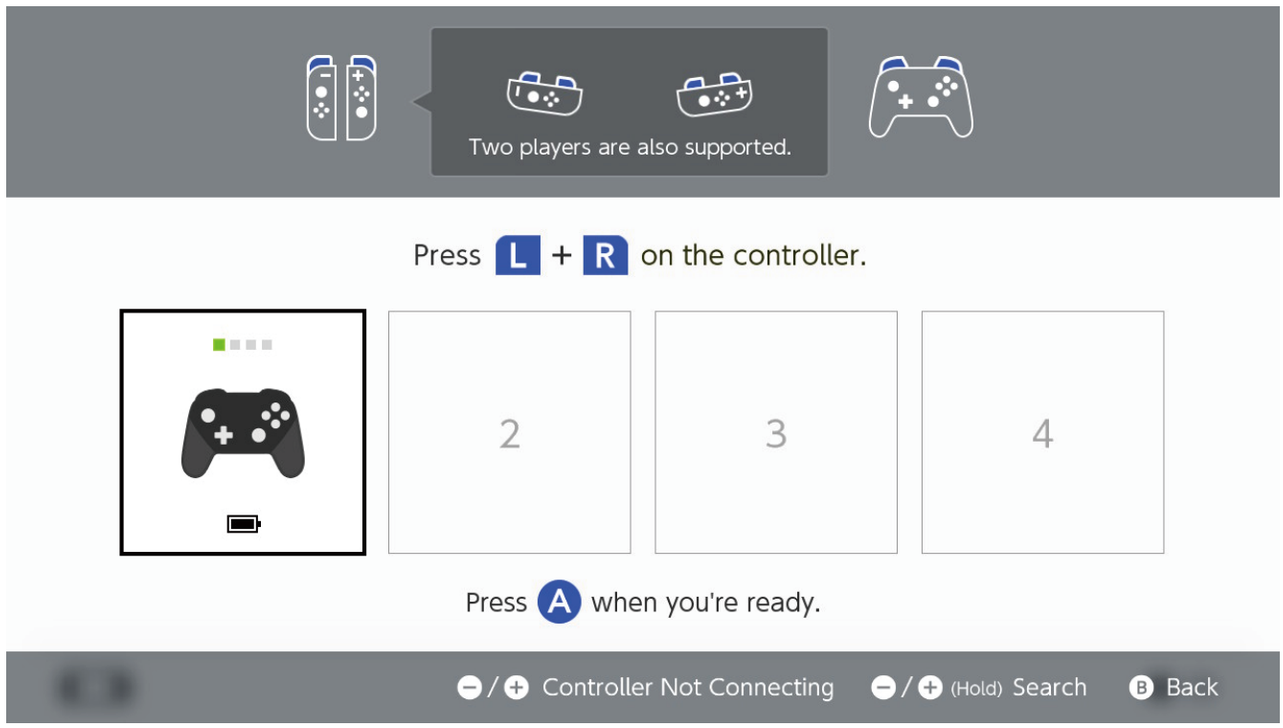

Wake Up and Reconnect

Once the controller has paired with the console:

- If the console is in the SLEEP mode, the "HOME" button of the controller is able to wake up both the controller and the console.

- If the console is on, all the buttons are able to wake up the controller, the controller will reconnect to the console.

If unable to connect,please follow the three steps:

1. Turn off the AIRPLANE mode on the console
2. Remove the controller’s information on the NS console (System Setting > Controllers and Sensors > Disconnect Controllers)
3. Follow the First-Time Pairing steps

Controller Auto Sleep

- In the wireless connection, press and hold the HOME button for 3 seconds, the controller will be disconnected and turn into sleep mode.
- If no button is pressed within 5 minutes, the controller will automatically sleep.
- The controller sleeps when the controler is in SLEEP mode.

Wired Connection

1.Turn on the "Pro Controller Wired Communitcation" in the console: System Settings > Controllers and Sensors > Pro Controller Wired Communication > On

Please Note: The “Pro Controller Wired Communication” must be turned on BEFORE connecting the controller and the Dock with the cable.

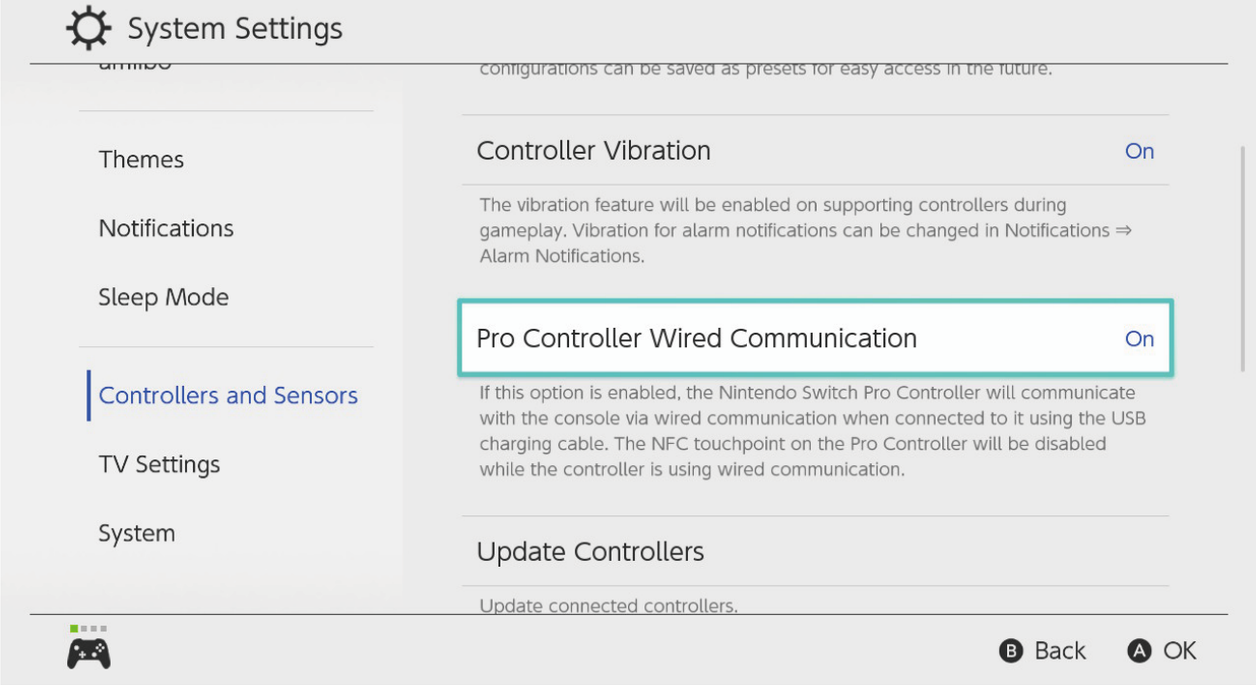

2. Set the Switch console on the Dock for the TV mode. Connect the Switch Dock and the controller directly with the USB Type C to A cable.

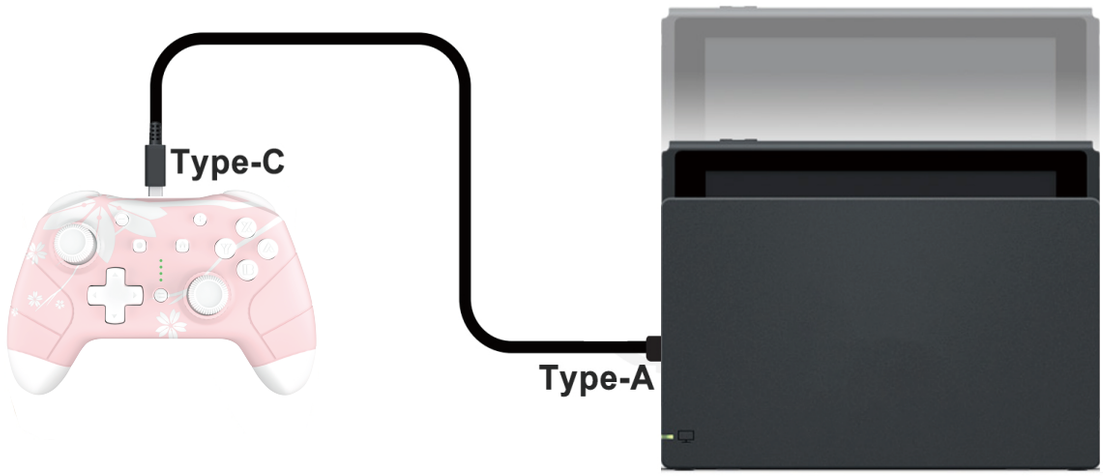

3. Press HOME button > Controllers > Change Grip/Order. The controller icon with the "USB" displayed on the screen indicates the wired connection is successful.

Audio Function

The controller has a 3.5mm audio port, supports 3.5mm wired headsets or microphones.

Please Note: The audio function will ONLY work in the Wired Connection Mode with a Switch console.
And It will NOT work under the wireless connection or when the controller is wired to a PC.

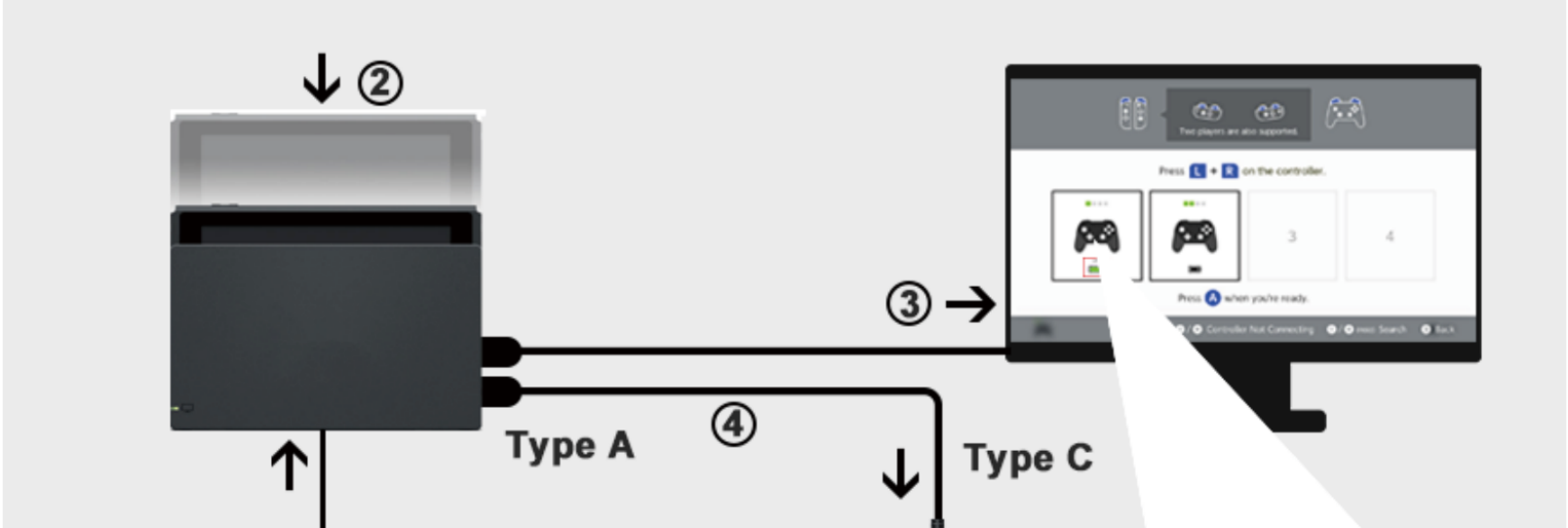

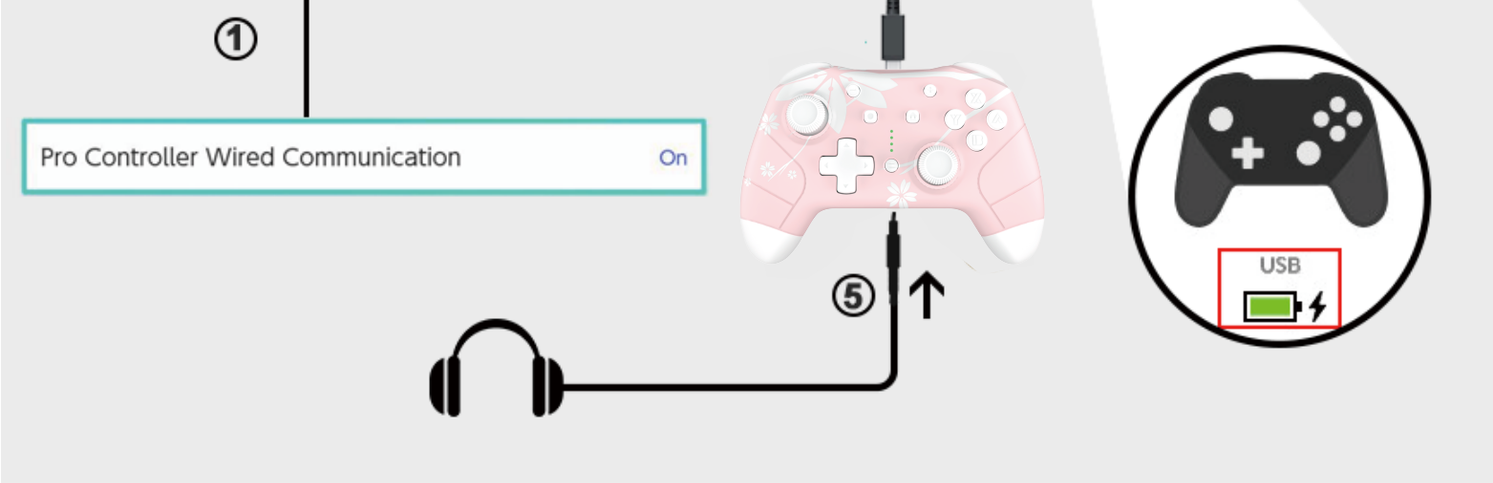

Please Note: The “Pro Controller Wired Communication” must be turned on BEFORE connecting the controller and the Dock with the cable.

① System settings > Controllers and Sensors > Pro Controller Wired Communication > On
② Set the Switch console on the Dock for the TV mode.
③ Connect the Switch Dock and the controller with the USB cable.
④ The icon with “USB” displayed indicates the wired connection is successful.
⑤ Plug the 3.5mm audio jack into the audio port on the bottom of the controller.

Turbo and Auto-fire

Buttons Available to Set the Turbo Function:
A/B/X/Y/L/ZL/R/ZR button

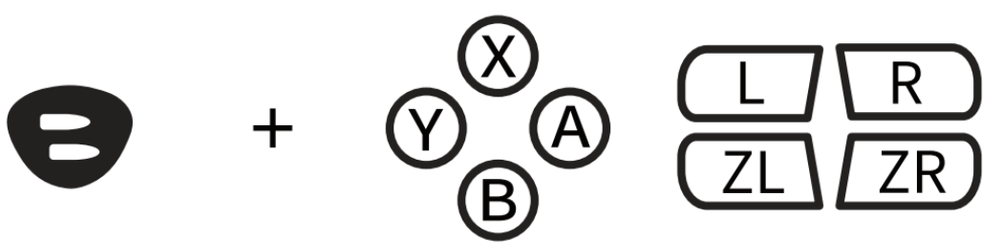

Set Up the Turbo Function:

1. Manual Turbo Function: Press and hold the Turbo button, then press any function button ONCE to turn on the “Manual Turbo Function”.

2. **Auto Turbo Function:** epeat the first step above to switch to the “Auto Turbo Function”.

3. **Turn Off the Turbo Function:** Repeat the first step after the “Auto Turbo Function” has been set.

urn Off All the Turbo Functions for All Buttons:

Press and hold the Turbo button for 3 seconds, then press the subtract ‘-’ button to turn off the turbo functions of all buttons.

There Are Three Levels For the Turbo Speed:

- **Slow:** 5 shots/s, the corresponding LED indicators will flash at aslow speed.
- **Medium:** 12 shots/s, the corresponding LED indicators will flash at a medium speed. (Default Level)
- **Fast:** 20 shots/s, the corresponding LED indicators will flash at a fast speed.

Adjust the Turbo Speed Levels:

Press and hold the Turbo button, push down the right joystick to decrease one grade of turbo speed; pull up the right joystick to increase one grade of turbo speed.

You Can Test and Check the Turbo Settings on a Console:
Settings > Controllers and Sensors > Test Input Devices > Test Controller Buttons

Adjust Vibration Intensity

There Are Four Levels of Vibration Intensity:
None, weak, medium, strong.

Adjust the Vibration Intensity:

- Press and hold the Turbo button, move the left joystick UP to increase one grade of vibration intensity
- Move the left joystick DOWN to decrease one grade of vibration intensity

Wired Connection on STEAM

- Connect the controller to the computer with the USB cable.
- It will be recognized as the STEAM "Pro Controller" mode and can be used for supported games.

Functions Comparison

Platform	Vibration	Turbo	Screenshot	Motion	Audio Function
Switch Wireless	√	√	√	√	×
Switch Wired	√	√	√	√	√
PC STEAM	√	√	√	×	×

Charging Instructions

- The controller can be charged using the Switch charger, the Switch Dock, 5V 2A power adapter, or USB power supplies with the USB Type C to A cable.

- If the controller is connected with the console while charging, the corresponding channel LED light(s) on the controller will flash. The channel LED light(s) will stay lit if the controller has been fully charged.

- If the controller is not connected with the console while charging, the 4 LED lights will flash. The LED lights will go off when the controller has been full charged.

- When the battery is low, the corresponding channel LED light(s) will flash; the controller will turn off and need to be charged if the battery is exhausted.

Calibrate the Control Sticks

- Press the HOME button **> System Settings > Controllers** and

Sensors > Calibrate Control Sticks > Press the stick you want to calibrate

- Follow the on-screen instructions to verify the controller functionality

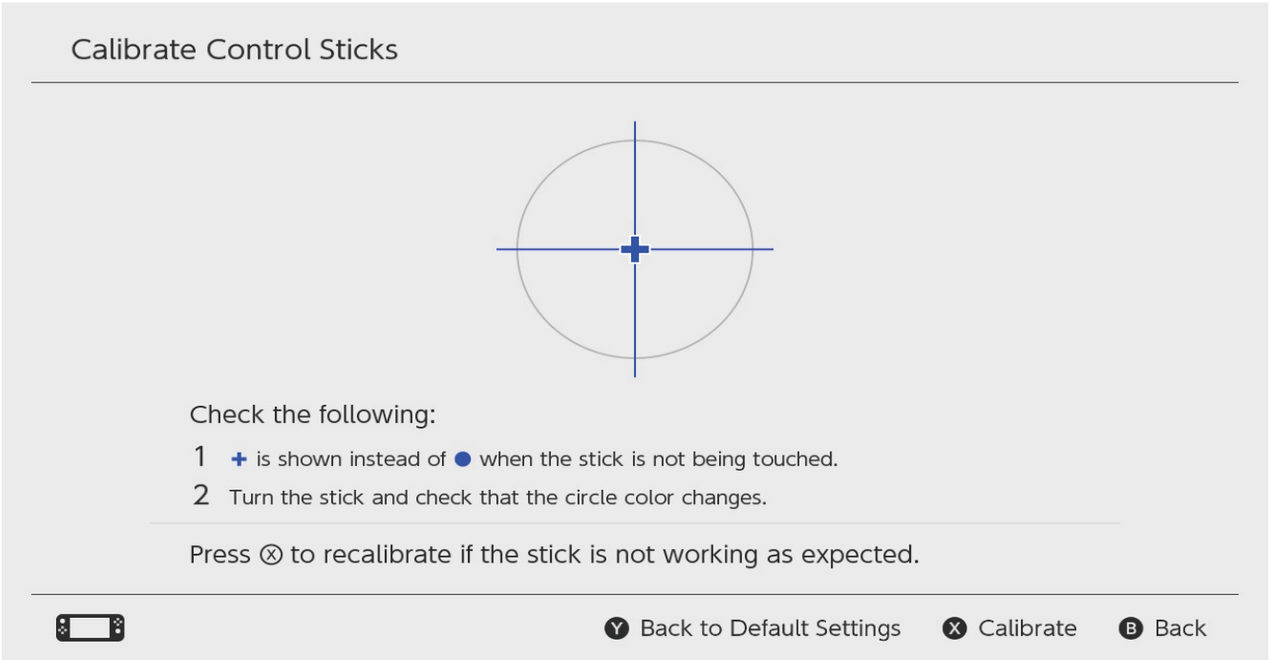

Calibrate Motion Controls

Press the HOME button **> System Settings > Controllers** and **Sensors > Calibrate Motion Controls > Calibrate the Controllers >** Put the controller on a horizontal plane and hold "-" or "+" on the controller you want to calibrate.

Please Note:

- When using the wireless controller for the first time, it is recommended to have both the Controller Sticks and Motion Controls calibrated before usage.
- If the calibration fails, please press the "Y" button to restore the settings and press the "X" button to repeat the calibration steps. Power off the controller once the calibration is finished, then restart the controller and console.

Warranty

The product comes with a 1-year limited warranty. Our goal is to achieve total customer satisfaction, we will do our best to understand our customer's requirements and always meet the requirements. If you have any questions, please do not hesitate to contact us via cs@mytrixtech.com. We will be more than happy to assist you.

Company Information

Company: Mytrix Technology LLC
Customer Service Tel: +1978-496-8821
Customer Service Email: cs@mytrixtech.com
Web: www.mytrixtech.com
Address: 13 Garabedian Dr. Unit C, Salem NH 03079