Lierda
利尔达

Hardware specification

LoRa 868/915MHz SPI Passive crystal standard modules

Module model：L-LRNWB25-84DN4

catalogue

1 Specification 6
2 Dimension drawing and pin definition 7
2.1 Dimensional drawings 7
2.2 Hardware block diagram and pin definition 7
3 Hardware design instructions 9
3.1 Power supply circuit 9
3.2 Antenna interface 9
3.3 Typical reference design circuit 9
3.4 Disable frequency point description 9
4 Frequently Asked Questions 11
4.1 Modules cannot communicate even at close range 11
4.2 Module power consumption anomaly 11
4.3 Insufficient module communication distance 11
5 operation instruction 13
5.1 Steel mesh opening design 13
5.2 Reflux welding operation instruction 13
6 contact us 14

The L-LRNWB25-84DN4 is a new generation of LORA spread spectrum RF transceiver module from Lierda Technology Group, with smaller size, lower power consumption and higher transmitting power. Based on SEMTECH's RF integrated chip SX1262 development block. It is a high-performance IoT wireless transceiver, and its special LoRa debugging method can greatly increase the communication distance, which can be widely used in various occasions in the field of short-range IoT wireless communication. It has the characteristics of small size, low power consumption, long transmission distance and strong anti-interference ability, etc. A variety of antenna solutions are available according to the actual application, and the module is equipped with a micro-control chip.

Applicable scenarios

-Automated Building Circulation System

-Smart Home

-Temperature and humidity sensors

-Wireless remote control, drones

-For applications requiring high communication distance

Product features

·Operating frequency band

- TX 860～930MHz

- RX 860～930MHz

·High Link Budget

- Sensitivity：-124dBm@SF7_BW125KHz

- Transmit power Max. 22 dBm

·Communication interface

- half-duplex

·Ultra-low power consumption

- power supply：DC3.3V

- Transmit current：130mA@TX power_22dBm

·Communication interface

- UART

Copyright This document is the copyright of Lilda Corporation and anyone who reproduces this document without our permission will be held liable.

Copyright © Lilda Technology Group, all rights reserved.Copyright © Lierda Science & Technology Group Co.,Ltd

Document revision history

Vers	Date	Change description
Rev01	2022-06-21	Initial version

1 Specification

Table1-1 Module limit parameters

Main parameters	Performance		Remakes
	Min	Max	
Supply voltage（V）	-0.3	+3.7	Exceeding the limit could damage the chip
Max RF input power（dBm）	-	+10	
Operating temperature（℃）	-40	+85	

Table1-2 Module operating parameters[1]

Main parameters		Performance			Remakes
		Min	Typical	Max	
Supply voltage（V）		1.8	3.3	3.6	
Operating temperature(℃)		-40	-	85	
Operating frequency band(MHz)	Emission	868	-	930	
	Receive	868	-	930	
Frequency deviation(KHz)		-1	-	1	
Emission currentmA)		120	130	135	@TX POWER 22dBm
Receive current (mA)		-	7	-	
Transmit power(dBm)		14	-	22	
Reception sensitivity(dBm)		-	-124	-125	SF 7_BW 125KHz
Communication interface		2*UART			
Digital interface level		3.3V TTL			

Table1-3 Digital I / O specification

Main parameters	Performance			VCC_IO	Remakes
	Min	Typical	Max		
VIH(V)	0.7*VCC_IO	-	VCC_IO+0.3	3.3V	-
VIL(V)	-0.3	-	0.3*VCC_IO	3.3V	-
VOH(V)	VCC_IO-0.6	-	VCC_IO	3.3V	-
VOL(V)	0	-	0.4	3.3V	-

[1] The above test conditions :temperature: 25℃, center frequency: 490M, working voltage: 3.3V

2 Dimension drawing and pin definition

2.1 Dimensional drawings

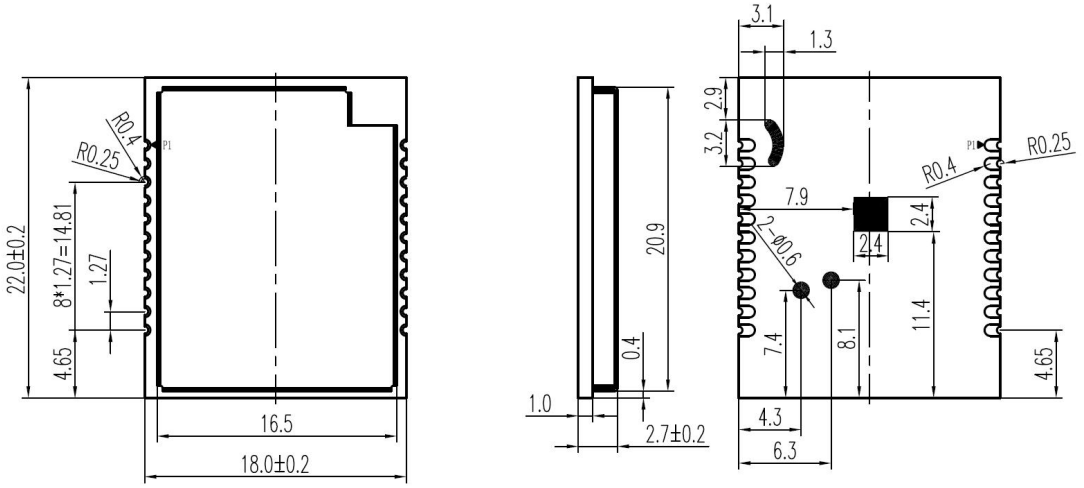

left view front view right view unit:mm

Figure2-1 Dimensional drawing of L-LRNWB25-84DN4

2.2 Hardware block diagram and pin definition

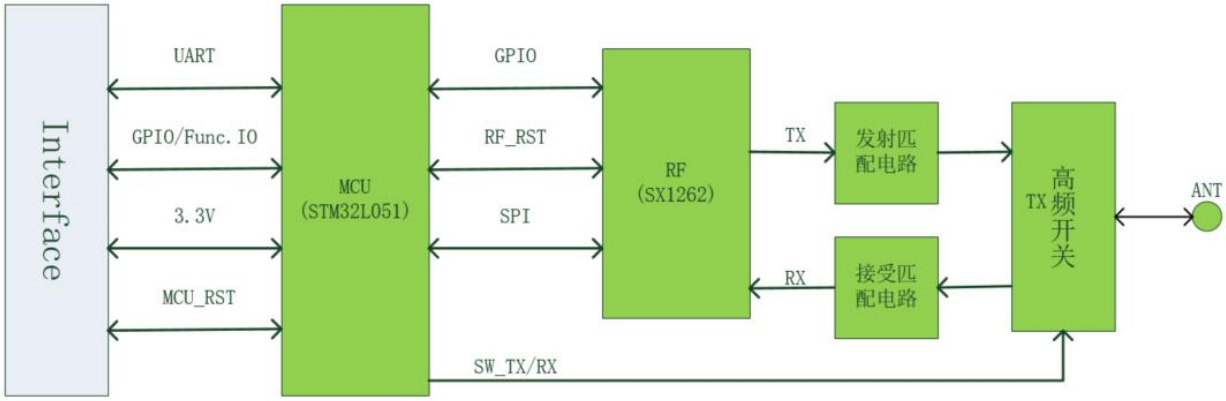

Figure 2-2 Hardware system block diagram

The defined pins of each module are shown in Table 2-1.

Table2-1 Pin name and function description

PIN	功能定义	端口类型	缺省值3	描述
1	GND	Power	-	GND
2	GND	Power	-	GND
3	NC	I/O	Low	
4	NC	I/O	Low	
5	NC	I/O	Low	
6	GND	Power	-	
7	NC	I/O	Low	
8	NC	I/O	Low	
9	SWDIO	I/O	-	NC
10	SWCLK	I/O	-	NC
11	NC	I/O	Low	
12	GND	Power	-	GND
13	VCC	Power	-	Supply voltage 1.8~3.6V
14	NRST	Reset	PULL-UP	NC
15	NC	I/O	Low	
16	NC	I/O	Low	
17	NC	I/O	Low	
18	TXD	Output	High	TX
19	RXD	Input	High-impendance	RX
20	GND	Power	-	GND
21	GND	Power	-	GND
22	ANT	RF	-	RF_OUTPUT

3 Hardware design instructions

3.1 Power supply circuit

The node module adopts 3.3V working voltage, and the typical current consumption under the maximum transmitting power of 22dBm is 130mA. In order to prevent the abnormal operation of the RF board due to the load change, the maximum output current of the external 3.3V power supply is recommended to meet the requirements above 300mA, and the power wiring is as short as possible.

3.2 Antenna interface

A type of circuit reserved between the rf pin of the module and the antenna interface is mainly used to match the antenna input impedance later. See "3.3 Typical Reference Design Circuit" for details.

3.3 Typical reference design circuit

Figure 3-1 is the typical design circuit of the module, and the use of other pins is adjusted accordingly according to the actual application requirements.

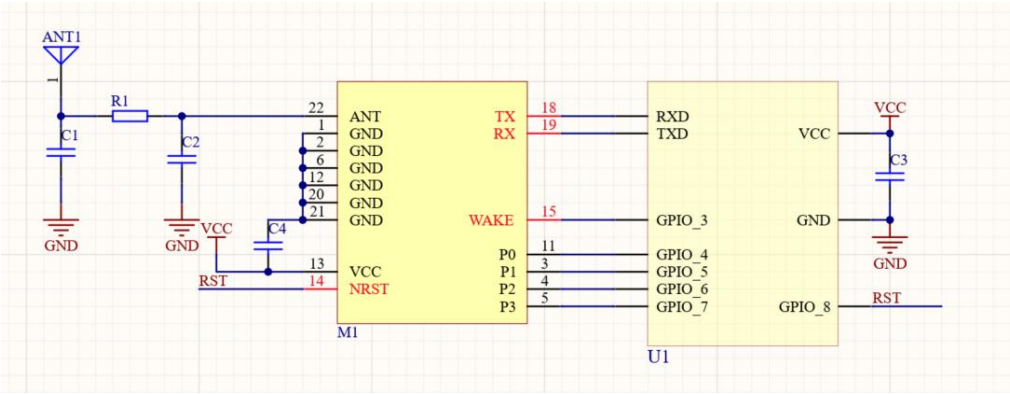

Figure 3-1Point-to-point communication flow chart

3.4 Disable frequency point description

Disable frequency point refers to the frequency point with extremely poor module performance, and it is strictly prohibited to use.It is recommended that the

frequency point used in the customer application is at least 1MHz from the disabled frequency point.

Disable frequency points: 472MHz, 480MHz, 496MHz.

4 Frequently Asked Questions

4.1 Modules cannot communicate even at close range

- Confirm that the configuration of the transmit and receive sides do not match, different configurations do not communicate properly.
- Voltages are abnormal, low voltages can lead to transmission abnormalities.
- Low battery, low battery voltage will be pulled down when transmitting causing a transmission abnormality.
- Antenna soldering abnormality RF signal is not reaching the antenna or π circuit is soldered incorrectly.

4.2 Module power consumption anomaly

- The module is damaged due to static electricity, etc., resulting in abnormal power consumption.
- hen doing low-power reception, incorrect timing configuration etc. leads to module power consumption does not achieve the expected effect.
- Individually measured module or MCU are normal, the power consumption abnormalities appear in the joint tuning is due to the MCU and RF module connection pins are not handled properly.
- The working environment is harsh, in high temperature, high humidity, low temperature and other extreme environment module power consumption will fluctuate.

4.3 Insufficient module communication distance

- The antenna impedance is not matched properly resulting in low power being transmitted.

- There are objects such as metal around the antenna or the module is inside metal causing severe signal attenuation.
- There are other interfering signals in the test environment causing the module to communicate at a close distance.
- Insufficient power supply causes the module to transmit at an abnormal power level.
- The test environment is harsh and the signal attenuation is high.
- Module through the wall and other environments and then communicate with the other end, the wall, etc. on the signal attenuation is very large, most of the signal is bypassed through the wall signal attenuation is large.
- The module is too close to the ground is absorbed and reflected resulting in poor communication.

5 operation instruction

5.1 Steel mesh opening design

In principle, the thickness selection of the steel network on the bottom plate is selected according to the comprehensive consideration of the packaging type of the devices in the plate, and the following requirements should be focused on: The module pad position can be locally thickened to 0.15~0.20mm to avoid air welding;

5.2 Reflux welding operation instruction

Note: This operation instruction is only suitable for lead-free operations and is for reference only.

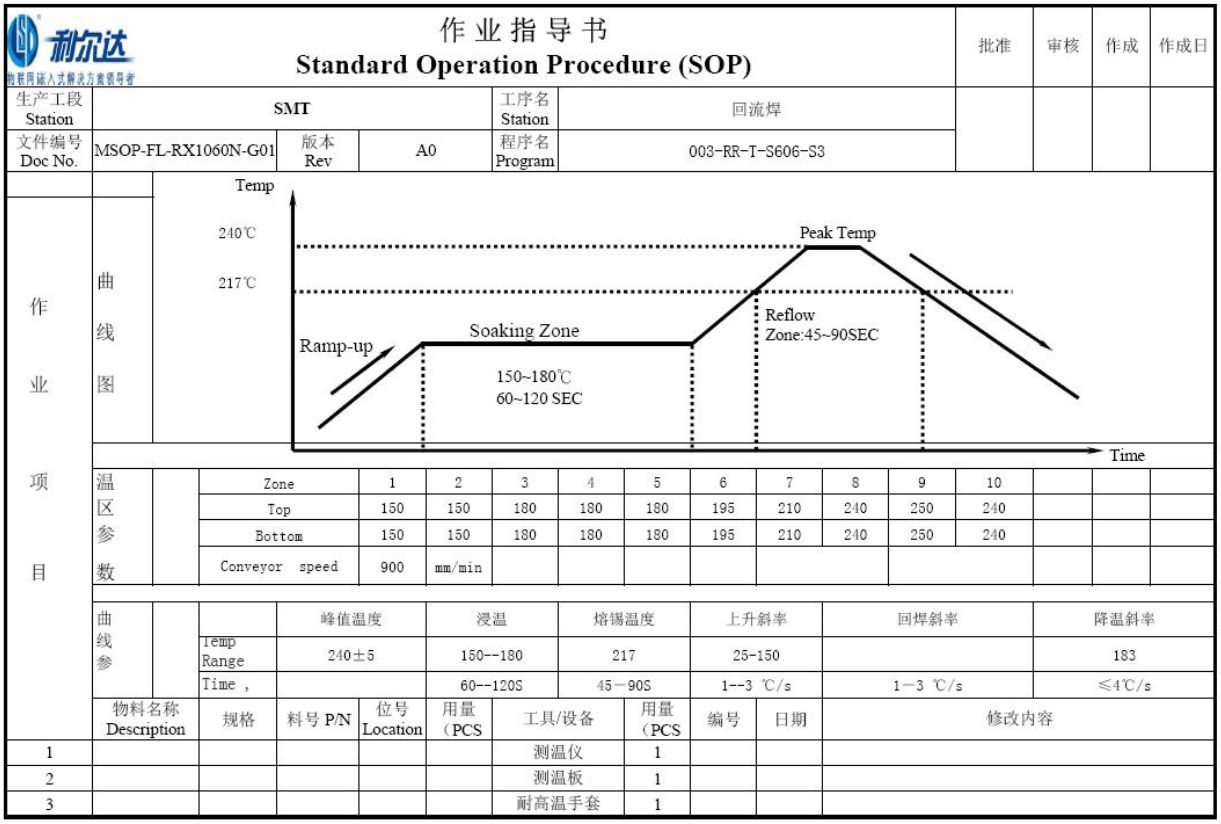

利尔达 物联网嵌入式解决方案领导者

作业指导书
Standard Operation Procedure (SOP)

批准	审核	作成	作成日

生产工段 Station	SMT			工序名 Station	回流焊
文件编号 Doc No.	MSOP-FL-RX1060N-G01	版本 Rev	A0	程序名 Program	003-RR-T-S606-S3

作业项目

曲线图

温区参数

Zone	1	2	3	4	5	6	7	8	9	10
Top	150	150	180	180	180	195	210	240	250	240
Bottom	150	150	180	180	180	195	210	240	250	240
Conveyor speed	900	mm/min								

曲线参

	峰值温度	浸温	熔锡温度	上升斜率	回焊斜率	降温斜率
Temp Range	240±5	150--180	217	25-150		183
Time ,		60--120S	45－90S	1--3 ℃/s	1－3 ℃/s	≤4℃/s

	物料名称 Description	规格	料号 P/N	位号 Location	用量 (PCS	工具/设备	用量 (PCS	编号	日期	修改内容
1						测温仪	1			
2						测温板	1			
3						耐高温手套	1			

5-1 Reflux welding operation instruction

6 contact us

Lilda Technologies Group Limited has always provided the most timely and comprehensive service to our customers. For any help, please contact our relevant personnel, or contact us as follows:

Data website：http://wsn.lierda.com

mail：wsn_support@lierda.com

Technology forum：http://bbs.lierda.com

Sample purchase：https://lierda.taobao.com

有问题？扫码说

When using the product, maintain a distance of 20cm from the body to ensure compliance with RF exposure requirements.

This device complies with part 15 of the FCC rules . Operation is subject to the following two conditions: (1) this device may not cause harmful interference, and (2) this device must accept any interference received, including interference that may cause undesired operation.

NOTE: The manufacturer is not responsible for any radio or TV interference caused by unauthorized modifications to this equipment. Such modifications could void the user's authority to operate the equipment.

NOTE: This equipment has been tested and found to comply with the limits for a Class B digital device, pursuant to part 15 of the FCC Rules. These limits are designed to provide reasonable protection against harmful interference in a residential installation. This equipment generates uses and can radiate radio frequency energy and, if not installed and used in accordance with the instructions, may cause harmful interference to radio communications. However, there is no guarantee that interference will not occur in a particular installation. If this equipment does cause harmful interference to radio or television reception, which can be determined by turning the equipment off and on, the user is encouraged to try to correct the interference by one or more of the following measures:

- Reorient or relocate the receiving antenna.
- Increase the separation between the equipment and receiver.
-Connect the equipment into an outlet on a circuit different from that to which the receiver is connected.
-Consult the dealer or an experienced radio/TV technician for help
- This device and its antenna(s) must not be co-located or operating in conjunction with any other antenna or transmitter

ORIGINAL EQUIPMENT MANUFACTURER (OEM) NOTES

The OEM must certify the final end product to comply with unintentional radiators (FCC Sections 15.107 and 15.109) before declaring compliance of the final product to Part 15 of the FCC rules and regulations. Integration into devices that are directly or indirectly connected to AC lines must add with Class II Permissive Change.

The OEM must comply with the FCC labeling requirements. If the module's label is not visible when installed, then an additional permanent label must be applied on the outside of the finished product which states: "Contains transmitter module FCC ID: 2AOFDL-LRNWB2584DN4. Additionally, the following statement should be included on the label and in the final product's user manual: "This device complies with Part 15 of the FCC Rules. Operation is subject to the following two conditions: (1) This device may not cause harmful interferences, and

(2) this device must accept any interference received, including interference that may cause

undesired operation."

The module is allowed to be installed in mobile and portable applications A module or modules can only be used without additional authorizations if they have been tested and granted under the same intended end-use operational conditions, including simultaneous transmission operations. When they have not been tested and granted in this manner, additional testing and/or FCC application filing may be required. The most straightforward approach to address additional testing conditions is to have the grantee responsible for the certification of at least one of the modules submit a permissive change application. When having a module grantee file a permissive change is not practical or feasible, the following guidance provides some additional options for host manufacturers. Integrations using modules where additional testing and/or FCC application filing(s) may be required are: (A) a module used in devices requiring additional RF exposure compliance information (e.g., MPE evaluation or SAR testing); (B) limited and/or split modules not meeting all of the module requirements; and (C) simultaneous transmissions for independent collocated transmitters not previously granted together.

This Module is full modular approval, it is limited to OEM installation ONLY. Integration into devices that are directly or indirectly connected to AC lines must add with Class II Permissive Change. (OEM) Integrator has to assure compliance of the entire end product include the integrated Module. Additional measurements (15B) and/or equipment authorizations (e.g. Verification) may need to be addressed depending on co-location or simultaneous transmissionissues if applicable. (OEM) Integrator is reminded to assure that these installation instructions will not be made available to the end user.